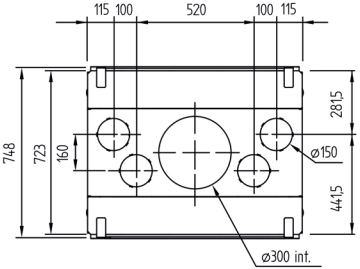

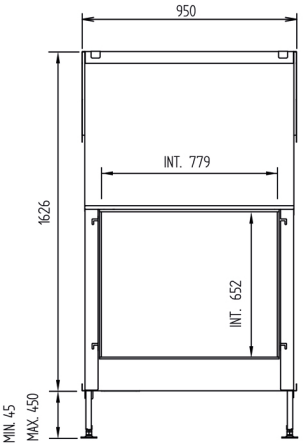

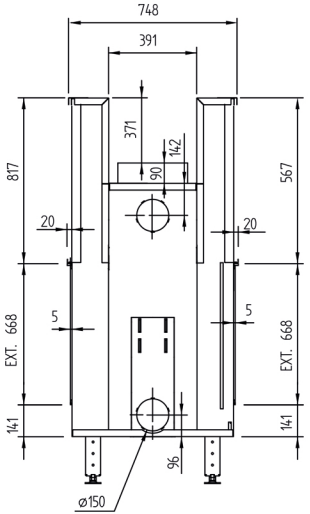

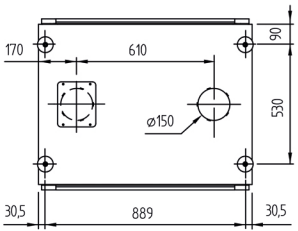

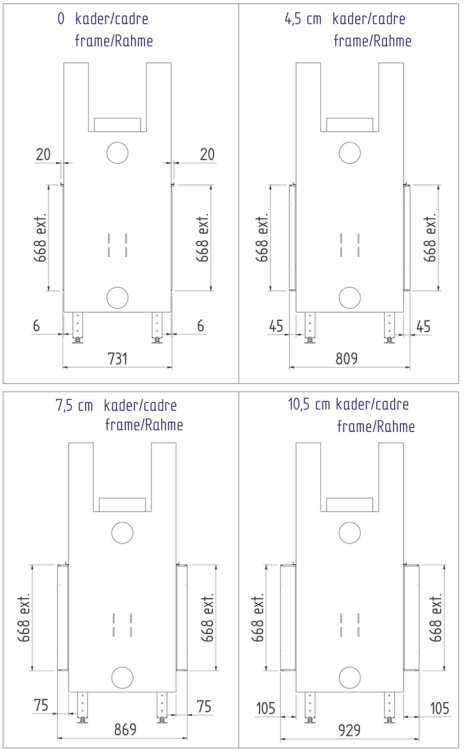

Luna Diamond 850DV