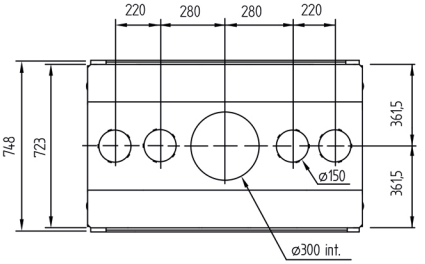

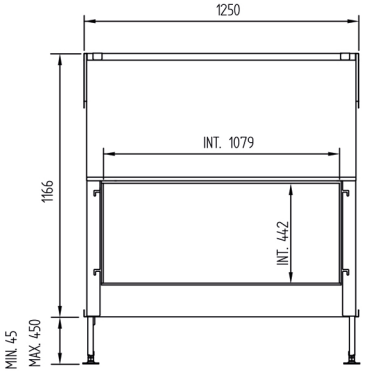

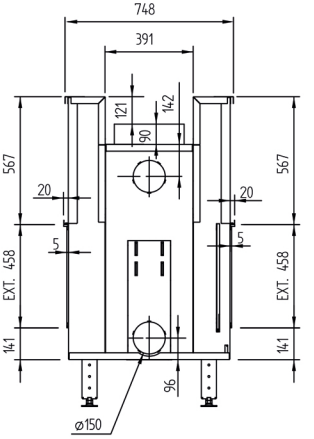

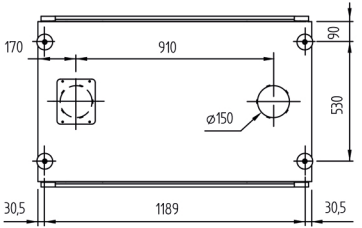

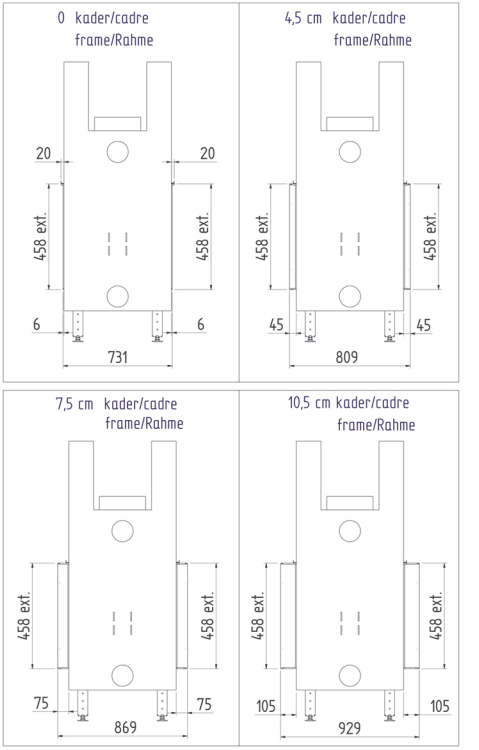

M design
PASSION FOR FIRE

Luna Diamond 1150DH